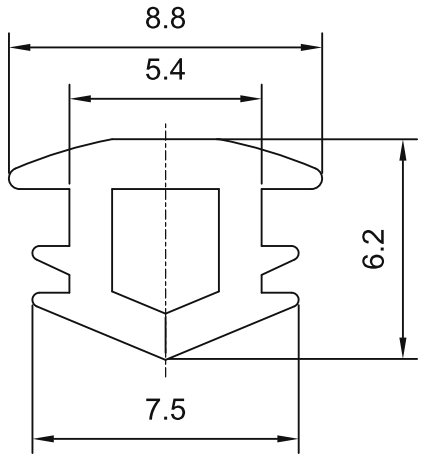

TECHNICAL NOTES:
1. Unit: mm.
2. Verify the complete section against the mating profile and panel.
COLOR / VARIANT:
XARG51-G306: Light grey, similar to RAL7047.
XARG52-G306: Black.

sinsdar

SEALING STRIPS

DRAWING / PART NUMBER

XARG51-G306 / XARG52-G306

MATERIAL: PVC

UNIT: mm SCALE: see dimensions SHEET: 1 / 1