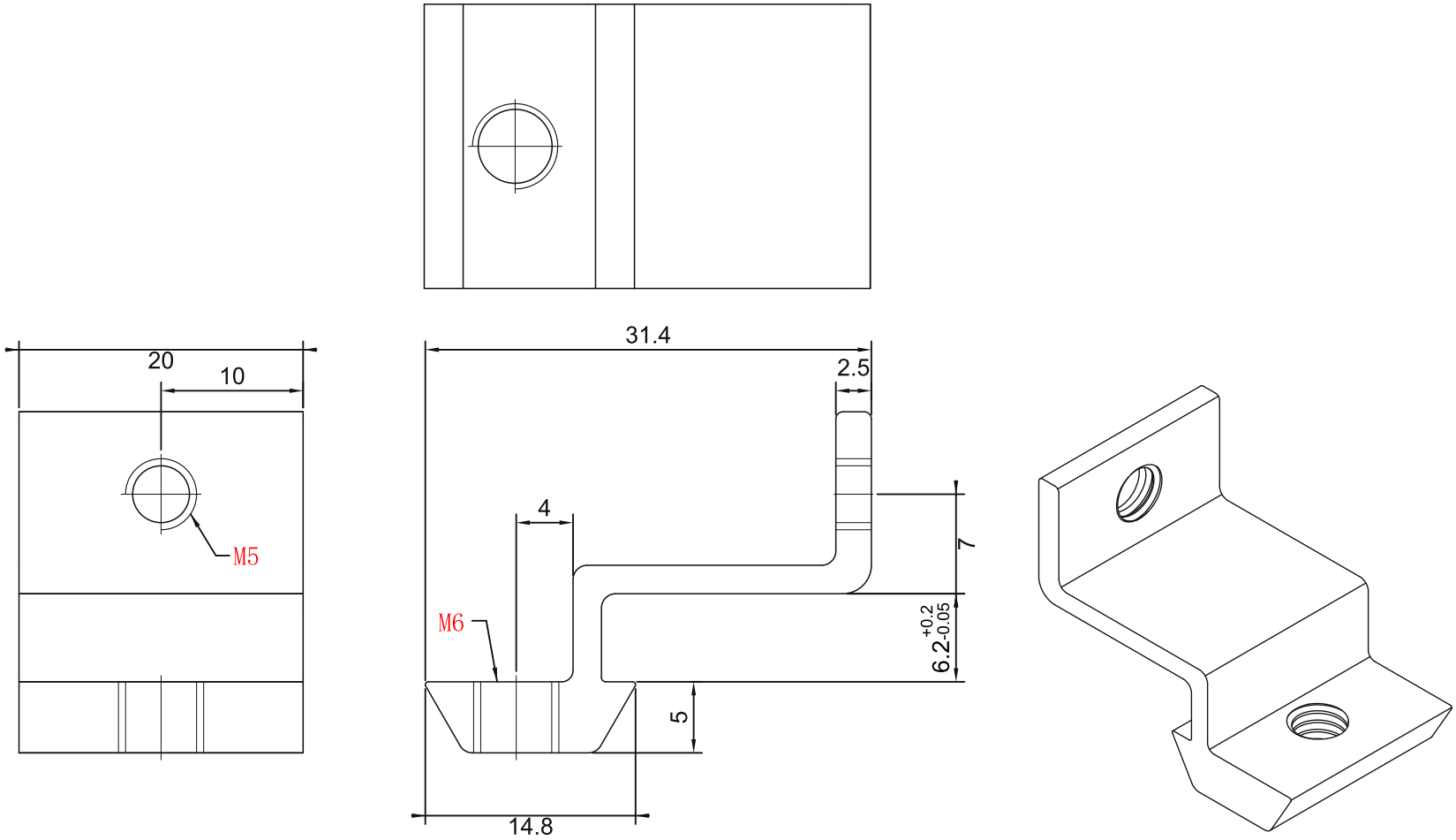

TECHNICAL NOTES:
1. Unspecified chamfers: C0.3.
2. Finish: anodize.
3. Unspecified tolerances: GB/T 1804, class M.
4. Deburr; no surface scratches or impact damage.

sinsdar

PANEL MOUNTING BRACKETS

DRAWING / PART NUMBER
XAMF01-6010

MATERIAL: A6063-T5

UNIT: mm SCALE: see dimensions SHEET: 1 / 1