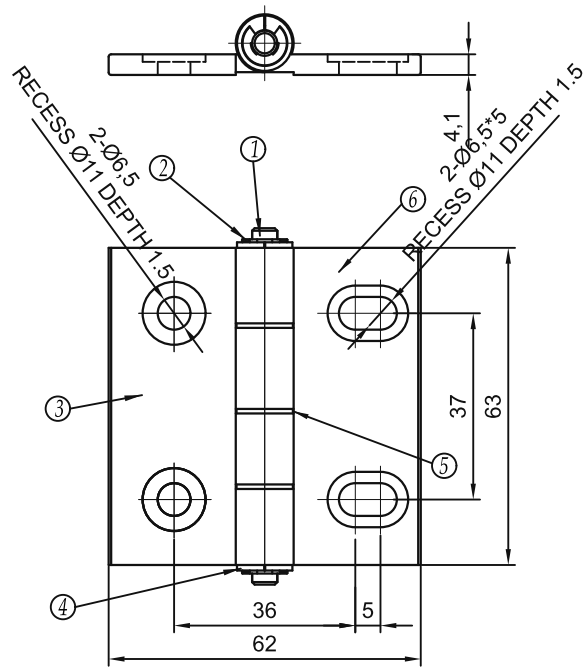

ITEM	PART NUMBER	NAME	QTY	MATERIAL	UNIT MASS	TOTAL MASS	NOTES
6	AKQ01-G-Y-6263-2	HINGE LEAF	1				
5	Ø5.5*11.5	WASHER	1				
4	Ø7*15	HINGE BUSH	4				
3	AKQ01-G-Y-6263-1	HINGE LEAF	1				
2	M5	E RETAINING RING	2				
1	Ø5*70	STAINLESS STEEL PIN	1				

sinsdar

ALUMINUM HINGES WITH SLOTTED HOLES

DRAWING / PART NUMBER

XAKQ01-G-Y-6263 /
XAKQ03-G-Y-6263

MATERIAL: A6063-T5

UNIT: mm SCALE: see dimensions SHEET: 1 / 1