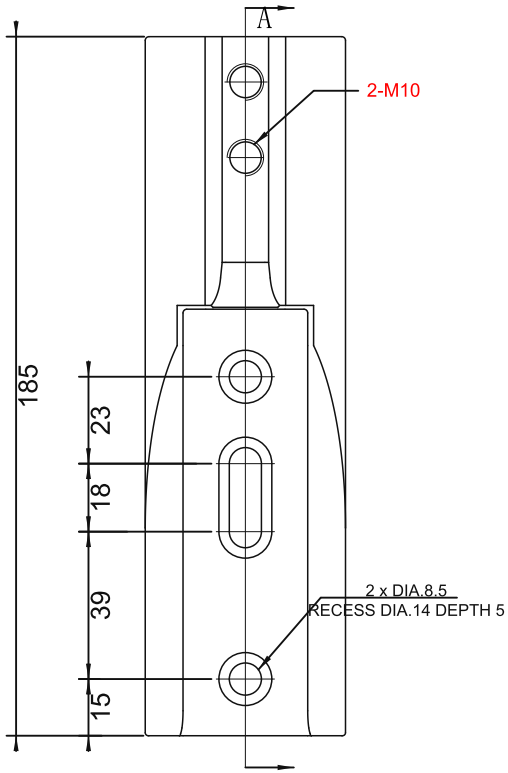

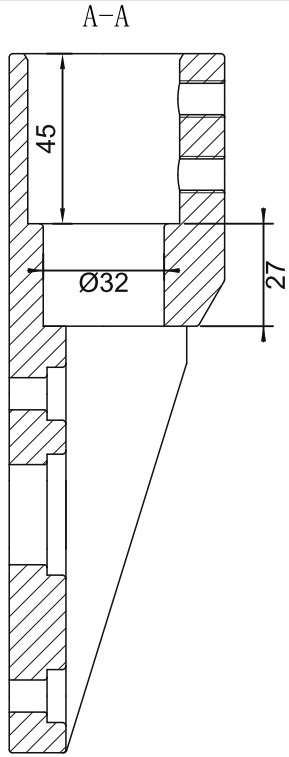

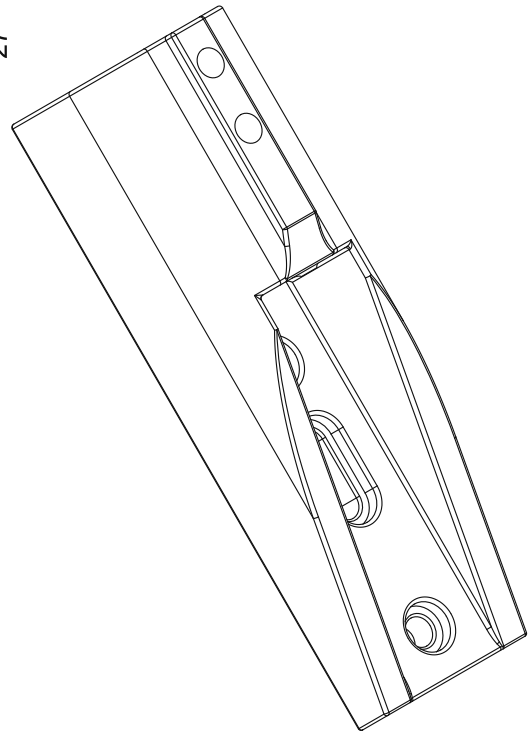

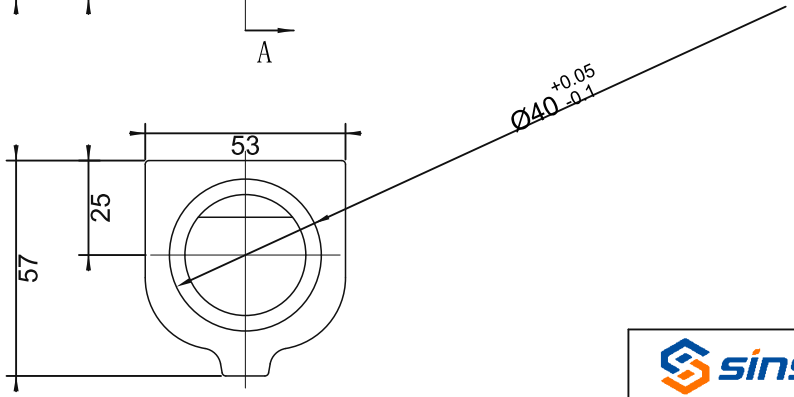

TECHNICAL NOTES:
1. Finish: surface finishing.
2. Unspecified tolerances: GB/T 15114-2009.
3. No burrs, sharp edges, scratches, dirt or spots.
4. Consistent product colour required.
5. Smooth connection to round tube required; verify mating dimensions.
6. Pre-install two M10-L12 set screws.

sinsdar

ROUND TUBE SUPPORTS

DRAWING / PART NUMBER
XAYF11-D40-CZ

MATERIAL: ADC12

UNIT: mm SCALE: see dimensions SHEET: 1 / 1