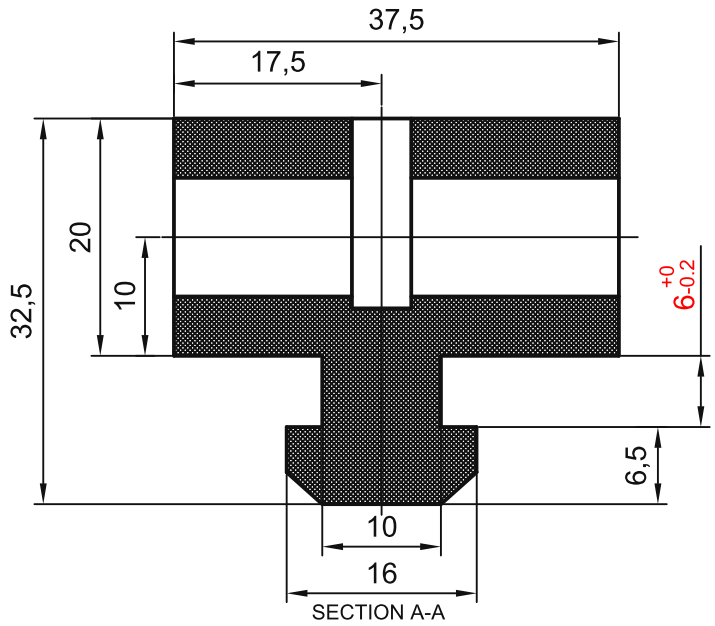

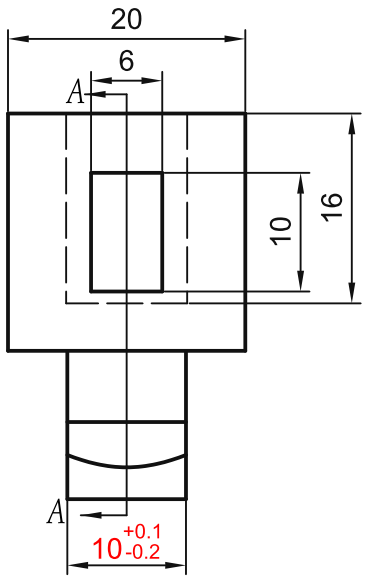



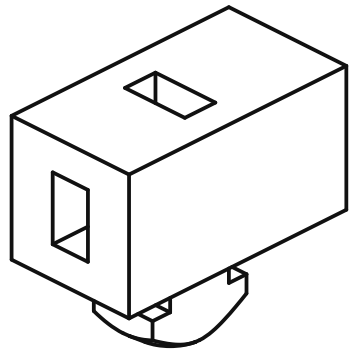

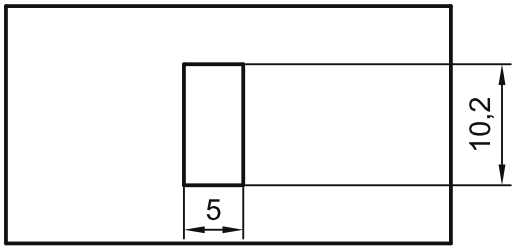

TECHNICAL NOTES:
1. Unspecified dimensional tolerances: +/-0.3 mm.
2. Round sharp edges R0.3.
3. No drag marks, sink marks, short shots, deformation or other defects on the exterior.
4. Square nuts must remain seated in the slot.

sinsdar

SPACER BLOCKS

DRAWING / PART NUMBER
XAMV51-4510

MATERIAL: PA (white)
UNIT: mm SCALE: see dimensions SHEET: 1 / 1