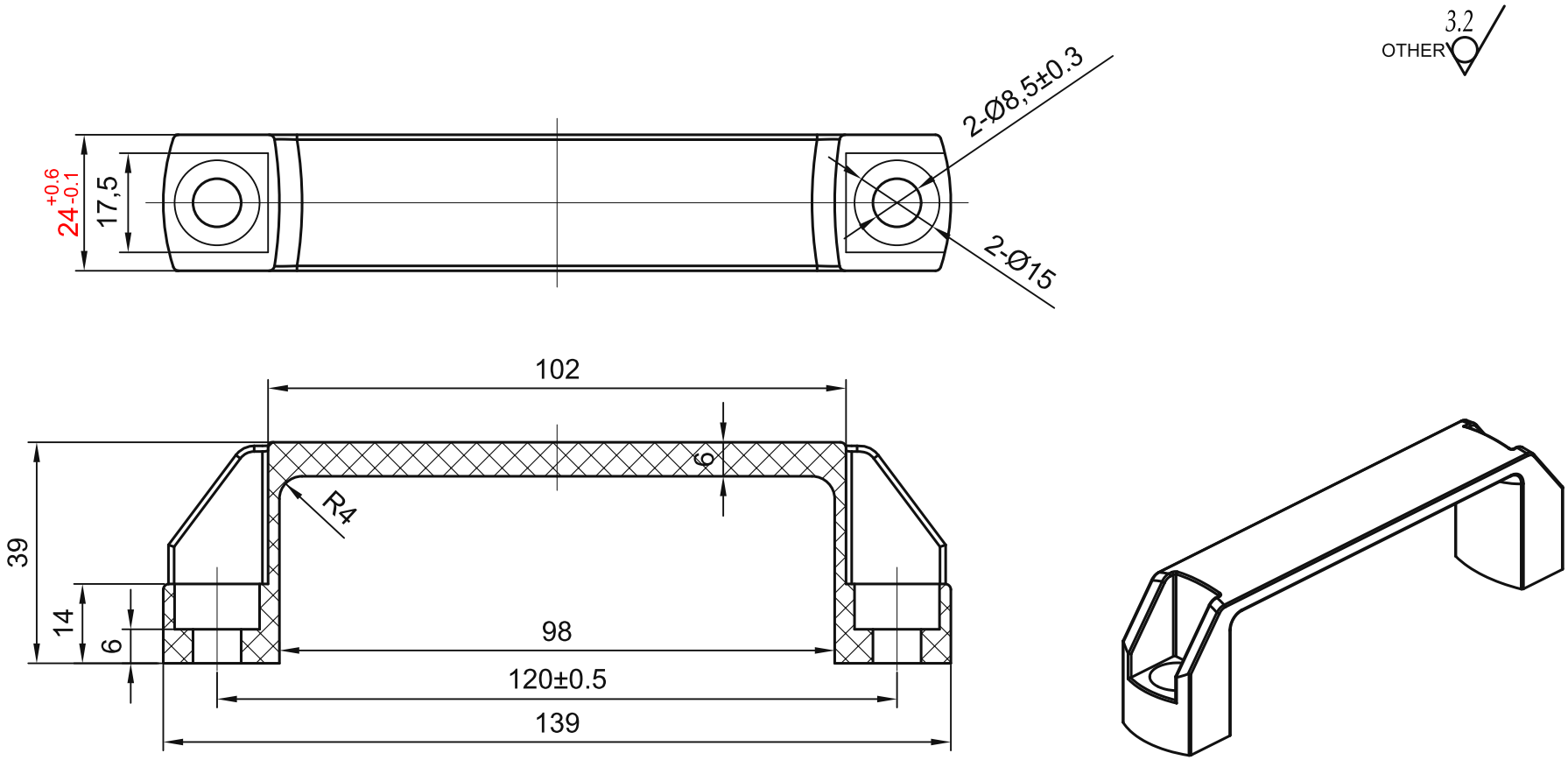

TECHNICAL NOTES:
1. Unspecified dimensional tolerances: +/-0.5 mm.
2. Unspecified fillets/chamfers: R/C0.5.
3. Black baked paint finish; deburr; no scratches or mould marks.

sinsdar

SQUARE BRIDGE PULL HANDLES

DRAWING / PART NUMBER
XAKL17-120

MATERIAL: ADC12

UNIT: mm SCALE: see dimensions SHEET: 1 / 1