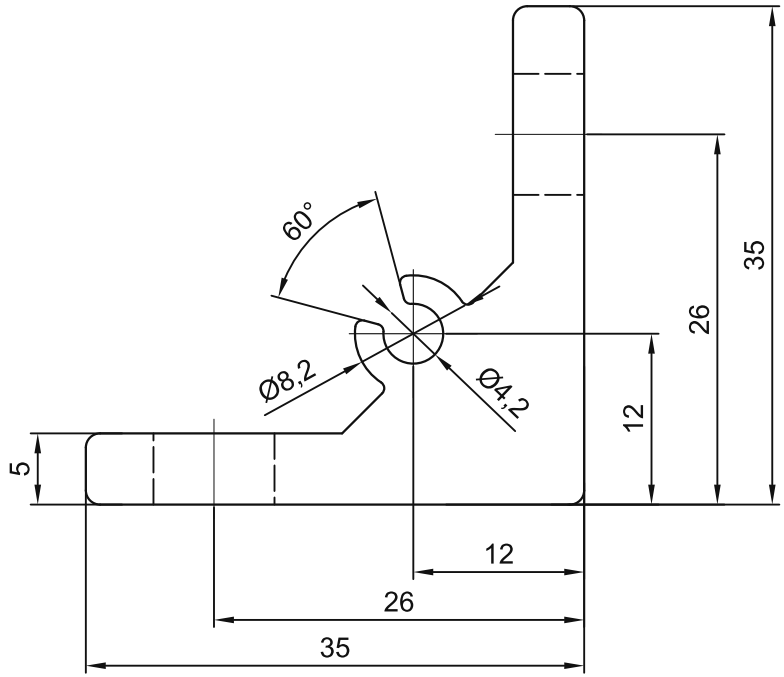

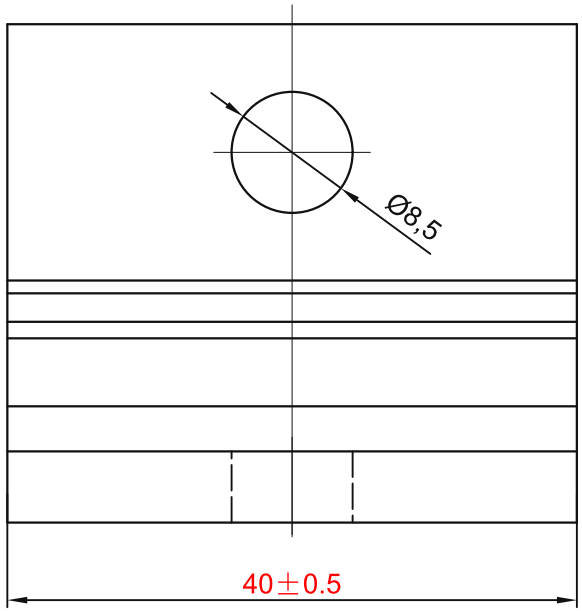

TECHNICAL NOTES:
1. Unspecified dimensional tolerances: +/-0.3.
2. Remove burrs and break sharp edges. No surface scratches, impact damage or spots.
3. Finish: 02 sandblast + anodize (cut faces and holes not anodized); 03 black anodizing.

sinsdar

EXTRUDED CORNER BRACKETS

DRAWING / PART NUMBER

XABC02-5010-35-40 / XABC03-5010-35-40

MATERIAL: A6063-T5

UNIT: mm SCALE: see dimensions SHEET: 1 / 1