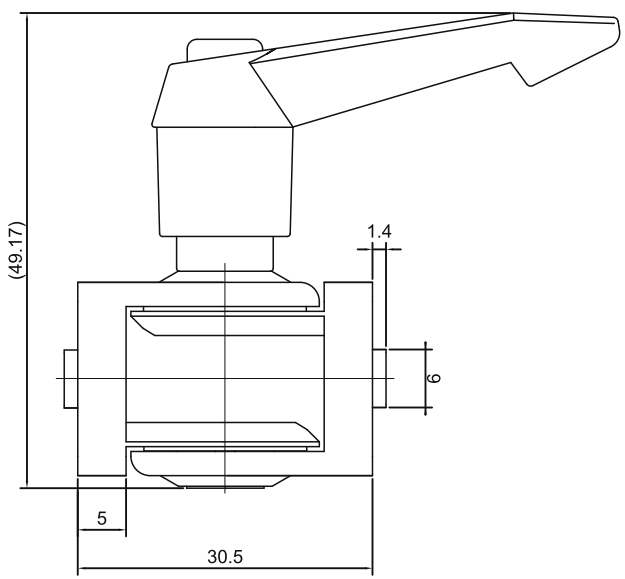

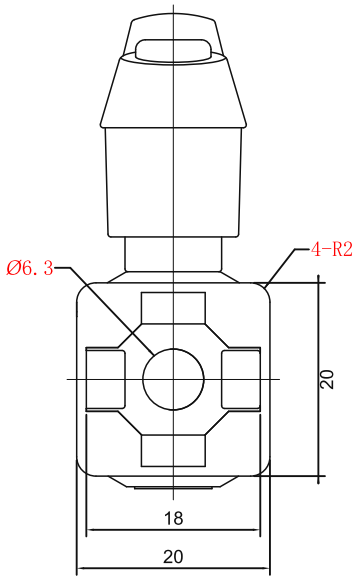

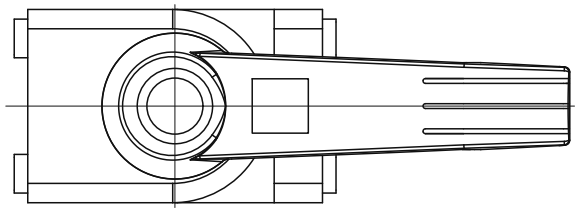

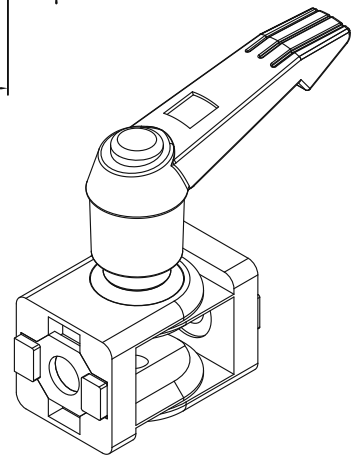

SELECTION REFERENCE - NOT FOR MANUFACTURE
1. Material: Zinc alloy. Finish: Spray coated.
2. Official nominal interfaces shown; verify mating dimensions.
3. Supplier auxiliary contours retained for reference.
4. Manufacturing tolerances are not specified in the reviewed official catalogue.

sinsdar

PIVOT JOINTS

DRAWING / PART NUMBER
XADU48-206-S

MATERIAL: Zinc alloy
UNIT: mm SCALE: see dimensions SHEET: 1 / 1