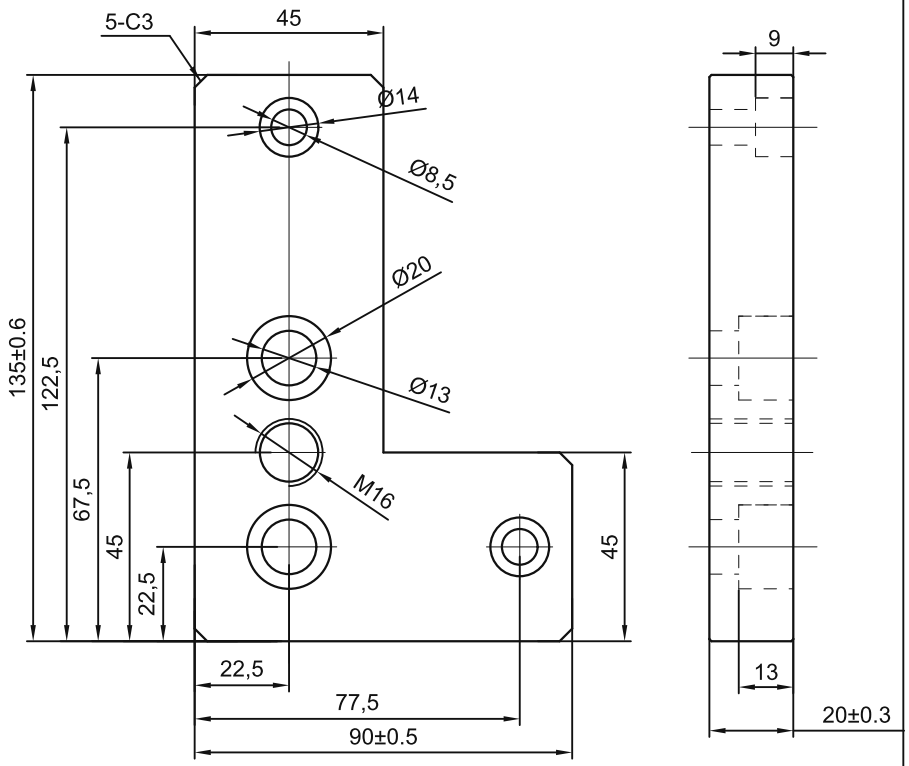

TECHNICAL NOTES:
1. Unspecified dimensional tolerances: +/-0.3.
2. Chamfer sharp edges C0.5; no burrs. Threaded-hole chamfers: C1.
3. No surface scratches or impact damage. Threads must run freely.4. Chrome-plate the surface.

sinsdar	BASE PLATES FOR LEVELING FEET & EYE BOLTS
DRAWING / PART NUMBER	XACF23-4510-4590-R-M16
MATERIAL: Q235	
UNIT: mm SCALE: see dimensions SHEET: 1 / 1	