SPECIFICATION	MASS (g/pc)
XACL11-G408-4040-M8	56. 7
XACL11-G408-4040-M10	54. 4
XACL11-G408-4040-M12	52. 6

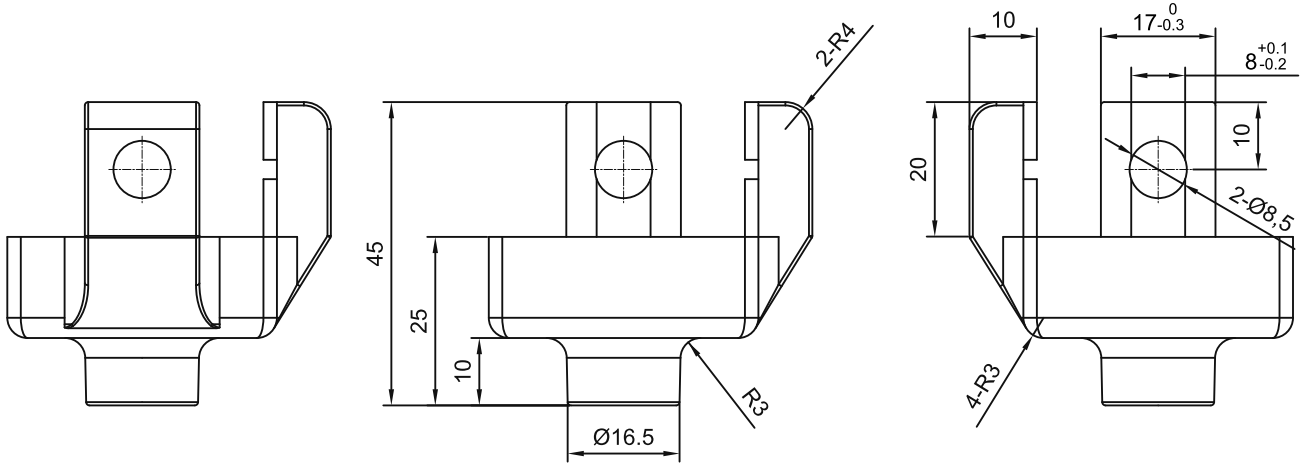

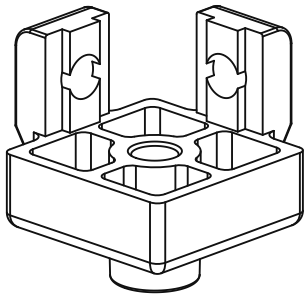

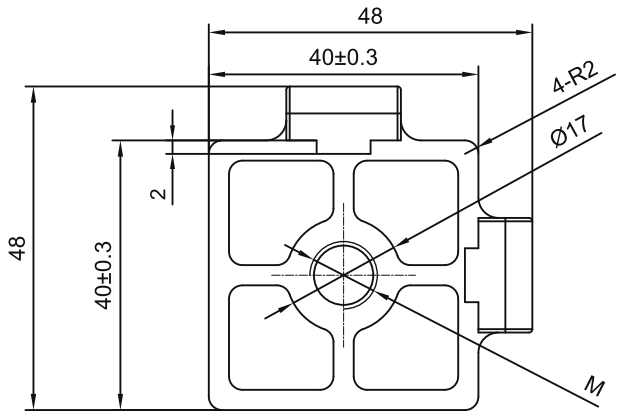

TECHNICAL NOTES:
1. Unspecified dimensions: see 3D drawing. Unspecified tolerances: +/-0.3 mm.
2. Unspecified fillets: R0.5.
3. Spray-paint the surface; no obvious mould marks or burrs.

sinsdar

LEVELING FOOT MOUNTS

DRAWING / PART NUMBER

XACL11-G408-4040-M8 / XACL11-G408-4040-M10 / XACL11-G408-4040-M12

MATERIAL: Aluminum alloy

UNIT: mm SCALE: see dimensions SHEET: 1 / 1