3.2
OTHER

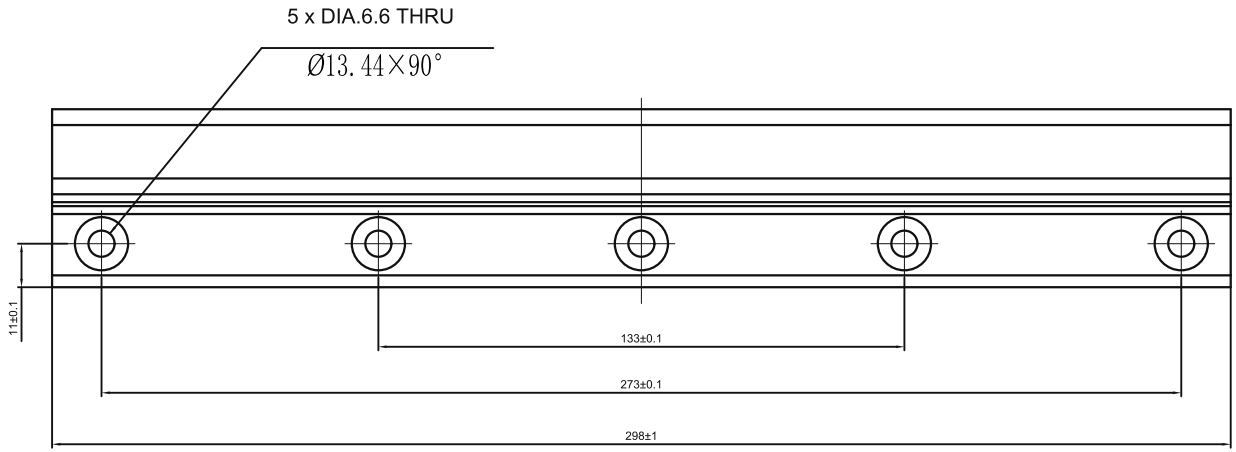

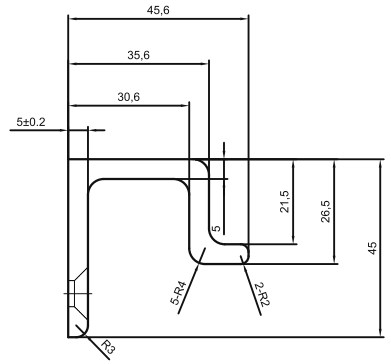

TECHNICAL NOTES:
1. Unspecified dimensional tolerances: +/-0.3.
2. Remove burrs and break sharp edges. No surface scratches, impact damage or spots.
3. Black anodize the surface.
4. Product mass: 426 g; hardness: 10-12 HW; coating thickness: 10 micrometres.

sinsdar

PROFILE PULL HANDLES

DRAWING / PART NUMBER
XAKN03-A

MATERIAL: A6063-T5
UNIT: mm SCALE: see dimensions SHEET: 1 / 1